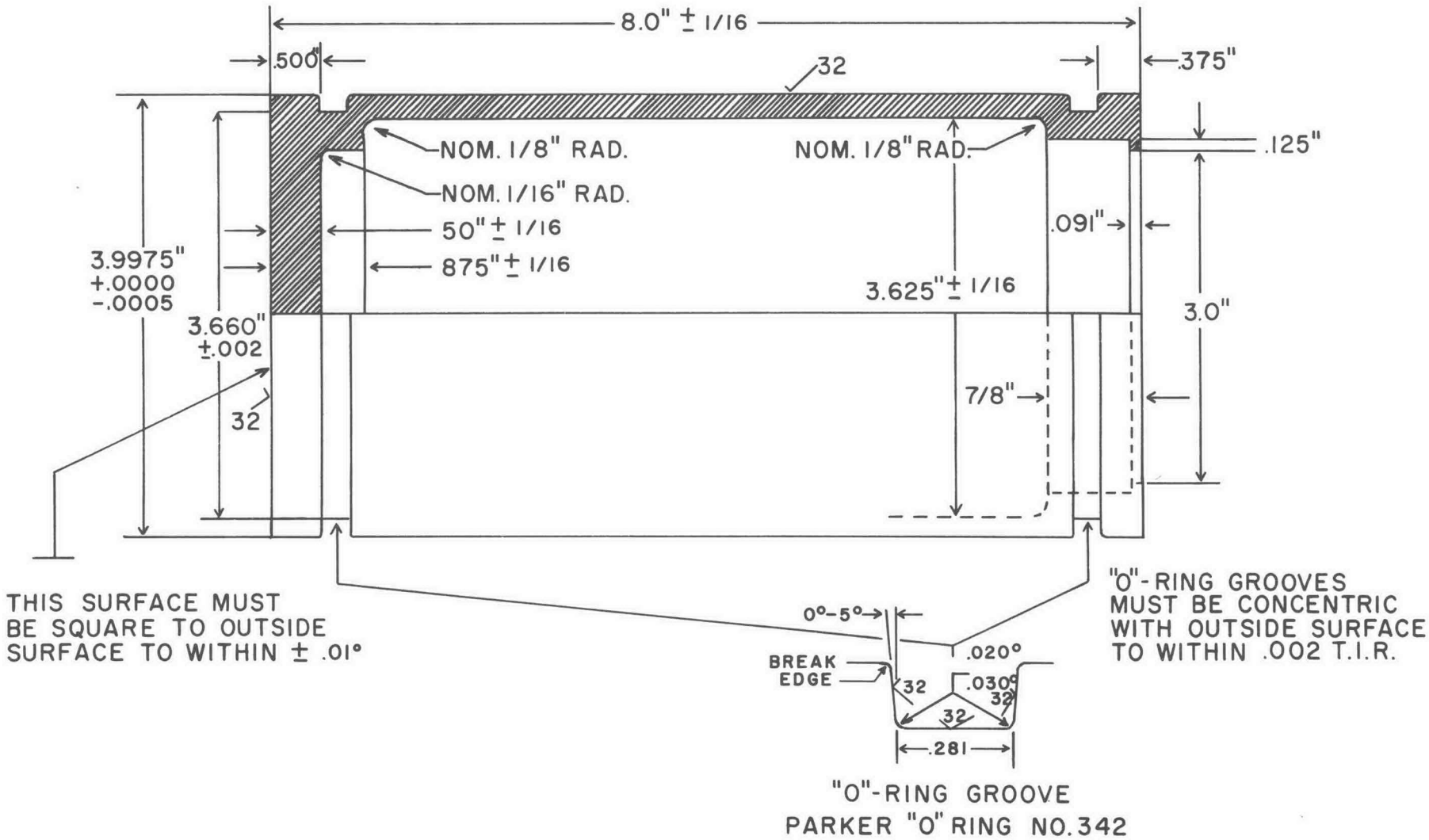

Fig. 9. Drawing of "standard" projectile. Material is 6061-T6 Aluminum.